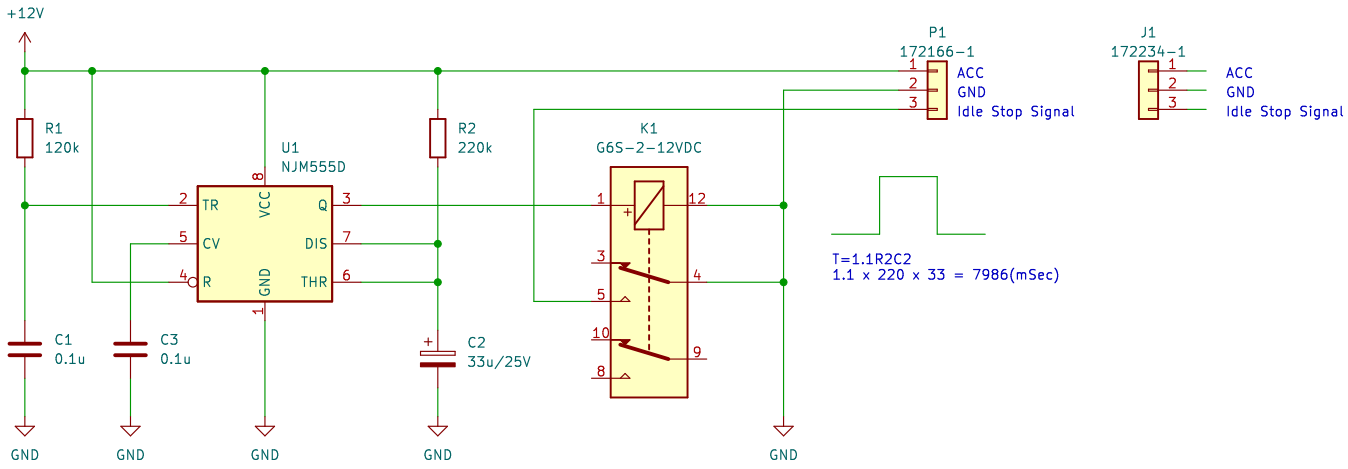

Garage Minakawa

Sheet: /
File: Idling Stop Canceller Unit.kicad_sch

Title: Idling Stop Canceller Unit

Size: A4	Date: 2024.11.02	**Rev:**
KiCad E.D.A. eeschema (6.0.10)		Id: 1/1